Pyromation's high-temperature thermocouples are designed to operate in a temperature range of (982 to 1871) ºC [1800 to 3400] ºF. They are designed for use in vacuum furnaces and other applications requiring high-temperature measurement in controlled atmospheric conditions. Metal sheaths of Alloy 600 and molybdenum are available as well as alumina ceramic sheaths. All assemblies are supplied with ungrounded, isolated hot junctions. The construction style consists of an alumina-insulated element inside the tube of choice as listed below. Special construction designs are also available.

METAL-SHEATHED ASSEMBLY

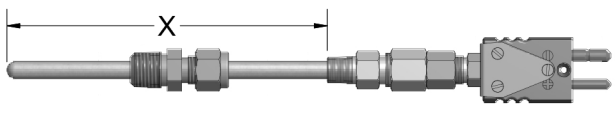

ALUMINA-SHEATHED ASSEMBLY

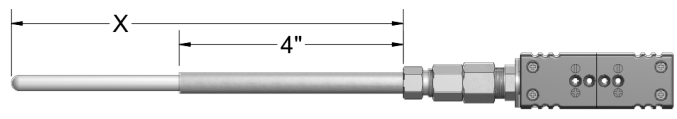

ORDER CODES

Example Order Number:

1		2		3		4		5		6		7
R24U	-	403	-	24	-	05A	-	TBL. 5	-	TBL. 6	-	TBL. 7

Select from following page

1 Single Elements

TYPE AND WIRE GAUGE CODE	
ALLOY 600	
B24U C24U R24U S24U	 R26U S26U
B24U C24U R24U S24U	 R26U S26U
MOLYBDENUM	
B24U C24U R24U S24U	 R26U S26U
B24U C24U R24U S24U	 R26U S26U
ALUMINA	
B24U C24U R24U S24U	 R26U S26U
For duplex elements use order code pre-fix letter twice. Example: RR24U	
CC24 assemblies not available in 0.188" O.D. sheath diameter.	

2 Sheath Size and Material

CODE	SHEATH DIA. (inches)	MAX. TEMP.	ATMOSPHERE
ALLOY 600			
303 303 303 303	0.188 0.188 0.188 0.188	1149 ºC [2100 ºF]	Oxidizing, Inert or Vacuum
403 403 403 403	0.250 0.250 0.250 0.250	1149 ºC [2100 ºF]	
MOLYBDENUM			
302 302 302 302	0.188 0.188 0.188 0.188	1704 ºC [3100 ºF] 1871 ºC [3400 ºF] 1482 ºC [2700 ºF] 1482 ºC [2700 ºF]	Inert or Vacuum
402 402 402 402	0.250 0.250 0.250 0.250	1704 ºC [3100 ºF] 1871 ºC [3400 ºF] 1482 ºC [2700 ºF] 1482 ºC [2700 ºF]	
ALUMINA			
617 617 617 617	0.275[1] 0.275[1] 0.275[1] 0.275[1]	1704 ºC [3100 ºF] 1871 ºC [3400 ºF] 1482 ºC [2700 ºF] 1482 ºC [2700 ºF]	Oxidizing, Inert or Vacuum
[1] Sheath supplied with 3/8" O.D. x 4" long stainless steel sleeve on tube cold end. Only available with size B and C compression fittings.			
Consult factory for availability of other diameters or insulations.			

4 Sheath Mounting Fittings

CODE	TYPE	NPT SIZE (inches)	AVAILABLE SHEATH DIA. (inches)
00	No sheath mounting fitting		
One-Time Adjustable Compression Fittings			
05A	Stainless steel	1/8	3/16, 1/4
05B	Stainless steel	1/4	3/16, 1/4, 3/8
05C	Stainless steel	1/2	1/4, 3/8
Re-Adjustable Compression Fittings			
12A	Stainless steel	1/8	3/16, 1/4
12B	Stainless steel	1/4	1/4, 3/8
12C	Stainless steel	1/2	1/4, 3/8
FEP gland standard (400 °F max.)			

3 Sheath "X" Length

LENGTH (inches)	LENGTH (inches)
12	30
18	36
24	
Specify other lengths in 1" increments.	

All assemblies are provided with wire seal fitting except platinum element assemblies in Alloy protection tubes.
All C24 assemblies in alumina protection tubes can only be used in inert or vacuum atmospheres.

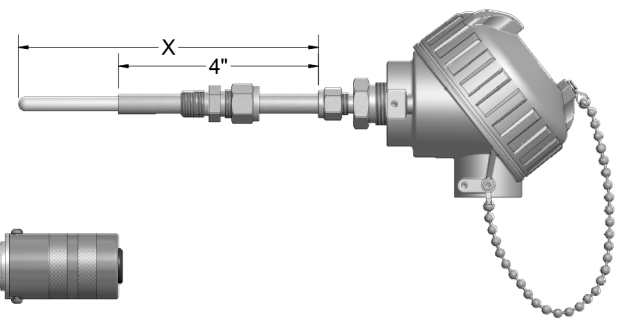

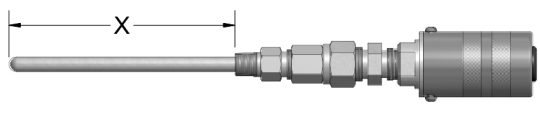

ORDER CODES

Example Order Number:

1		2		3		4		5		6		7
R24U	-	403	-	24	-	05A	-	15	-	F1A036	-	4

Select from preceeding pages

5 Plug and Jack Terminations

CODE	DESCRIPTION	SHEATH O.D. (inches)
4	Standard plug	3/16 thru 3/8
4,HT	Standard hi-temp plug 425 ºC [797 °F]	3/16 thru 3/8
MC	Mating connector	

Head Terminations

CODE	DESCRIPTION
9CF31	Aluminum screw-cover head secured to sheath with SS compression fitting
8HN31[1]	Aluminum screw-cover head with 1/2" NPT stainless steel hex fitting
9CF25	Mini nickel-plated steel head

Leadwire Transitions (requires leadwire selections)

CODE	DESCRIPTION
15[1]	Extension leadwire transition fitting with relief spring 204 ºC [400 °F]
15HT[1]	Extension leadwire transition fitting with relief spring and High temperature potting 538 ºC [1000 °F]

7 Terminations

CODE	DESCRIPTION
0	Leads not stripped
2	2" split leads, 1/4", stripped
3	2" split leads with spade lugs
4[1]	Standard plug
6[1]	Miniature plug

Options

CODE	DESCRIPTION
MC[1]	Mating connector

6 Extension Leadwire

CODE	WIRE GAUGE INSULATION DESCRIPTION	T/C AVAILABLE
F1	Solid; fiberglass insulation	R,S,B
F1A	Solid; fiberglass insulation with flexible S.S. armor	R,S,B
T1	Solid; fluoropolymer insulation	R,S
T1A	Solid; fluoropolymer insulation with flexible S.S. armor	R,S
To complete order code, insert wire code and 3 digit "B" length code. Example: F1A036=36" "B" length		

[1] Only with platinum elements in 303-403 sheaths.